International Symposium on Innovation & Sustainability of Structures in Civil Engineering
Xiamen University, China, 2011

A SMART WIRELESS SENSOR NETWORK FOR STRUCTURAL DAMAGE DETECTION

Ying Lei[1], Lijun Liu[1,2], Yongqiang Jiang[1], Yuliang Tang[3] and Yu Luo[3]

[1] *Department of Civil Engineering, Xiamen University, Xiamen, 361005, China*
[2] *Department of Mechanical and Electrical Engineering, Xiamen University, Xiamen, 361005, China*
[3] *Department of Communication Engineering, Xiamen University, Xiamen, 361005, China*

Abstract: The real virtue of a wireless sensor network is the fact that it is a new sensing paradigm offering distributed data processing capacity, which can be used for structural health monitoring. For this purpose, a smart wireless sensor network is established for autonomous structural damage detection in this paper. The designed wireless sensor network has a two-level cluster-tree architecture. Distributed sensors are grouped into clusters in which a cluster head is assigned to each cluster to coordinate the sensors in its cluster. Hardware designs of the sensor unit and the cluster head are studied, especially the cluster head consists of a low power DSP with strong computing capacity. Thus, the wireless sensor network provides distributed computation resources at group level. Then, an algorithm for distributed structural damage detection with limited input and output measurements is proposed. A large size structure is decomposed into smaller substructures based on substructure approach. Inter-connection effect between adjacent substructures is considered as 'unknown inputs' to substructures. Element level structural parameters and the unknown inputs in each substructure are identified by a two step Kalman estimator and least-squares estimation approach to save computational power and storages. Finally, the proposed algorithm is embedded into the designed wireless sensor network, which grants the network with "smart" characteristics. The smart sensor network is experimentally verified by application to detect structural damage of a multi-story building. It is shown that it is effective for autonomous detection of structural damage.

Keywords: smart sensor network, wireless sensor, zigbee, network topology, hardware design, distribute computing, Kalman estimator, structural damage detection

1 INTRODUCTION

With the developments of wireless communication and sensor network, some innovative wireless sensor networks have been established in recent years for structural health monitoring without the extensive lengths of wires in the tethered systems (Spencer,2004; Lynch and Loh,2006; Lynch,2007). However, it is still difficult to transmit all the measured data in real time to the central data acquisition station using wireless sensing network for large-size structures due to the limitation of bandwidth in wireless communication (Lynch,2007) . Moreover, it's also too power consuming to send the tremendous amount of recorded data to the central station because portable battery is the only power source for each sensor node. Preserving battery energy of wireless sensor network is of major concern (Gao, Spencer Jr and Ruzi-Sandoval,2006; Glaser and Li etc,2007). A main design challenge in sensor networks is energy efficiency to prolong the network operable lifetime. Since most of the energy is spent for radio communication, the real virtue of wireless sensor network is the fact that wireless sensors are a new sensing paradigm offering distributed data processing (Patra and Roy,etc,2010; Ababneh,2010). One of the efficient strategies is to embed some data processing and analysis algorithms in the wireless sensor's microprocessor. The embedded algorithms enable the wireless sensor network to autonomously analyze data, which grants the network with "smart" characteristics. So far, some smart networks have been established (Lynch,2007; Gao, Spencer Jr,2006; Lynch,Sundararajan,2003; Zimmerman,2008; Lei and Shen, 2010), but most of data processing and analysis are designed at sensor level, which is not suitable for autonomous detection of structural damage in large size

structures. On the other hand, many complex sensor networks require deploying a large number of sensors. Hierarchical clustering is generally considered as an efficient way to facilitate the management and operation of large-scale networks and minimize the total energy consumption for prolonged lifetime (Gu,2010). In this paper, a new type of hierarchical wireless sensor network is established. The sensor network has a two-level cluster-tree architecture with Zigbee communication protocol built on IEEE802.15.4 wireless communication standard (IEEE Standard,2003; Chipcon Inc). The distributed sensors are grouped into clusters, in which a cluster head is assigned to each cluster to control the communication in the allocated cluster. A cluster head not only serves as a router of the network messages but also possesses computational capabilities with the data collected from the sensor nodes in the cluster. Hardware of the sensor unit and the cluster head are studied, especially the cluster head consists of a low power DSP with strong computing capacity. Therefore, the sensor network provides parallel computation resources at group level, which is a particularly useful feature for the implementation of computational methodologies for structural health monitoring and damage detection of large-size structures.

It is an important but challenging task to detect structural damage in large-size structure as structural damage is an intrinsically local phenomenon. Various structural damage detection techniques have been proposed while approaches based on system identification (SI) have received great attention (Meier, Havaranek,etc,2009; Chang,2009). It is straightforward to identify structural damage based on tracking the changes in the identified values of structural dynamic parameters at element level, e.g., the degrading of element stiffness parameters. However, as an inverse problem, damage detection by the conventional SI approaches is challenging. It is highly desirable to deploy as few sensors as possible, so it's essential to explore efficient algorithms which can detect structural damage utilizing only a limited number of measured responses of structures subject to some unknown (unmeasured) excitation inputs.

Extended Kalman filter (EKF) has been studied and shown to be useful for structural identification with limited measurements of structural response outputs (Hoshiya and Saito,1984; Saito and Takei,1998; Yang and Lin,etc,2006), but the traditional EKF approaches require that all excitation inputs are measured or available. Moreover, in the extended state vector, both structural response state vector and structural parameters are included. The state vector and the parametric vector are estimated simultaneously, which may lead to divergent behavior for a large number of unknown parameters (Yang and Lin,etc,2006). Moreover, such estimation requires large computation effort and storages, which can hardly be implemented by the micro-processors in the wireless sensor network. To remove these drawbacks of the current EKF approaches, a two-step Kalman estimator approach, which is not available in the previous literature, is proposed in this paper. In the first step, structural response state vector is considered as an implicit function of the structural parameters, and the parametric vector is estimated directly by the Kalman estimator. In the second step, structural state vector is updated by applying the Kalman estimator again. Thus, the numbers of unknown parameters to be estimated in each step are greatly reduced. Then, unknown external excitations are estimated via least-squares estimation. So, the proposed algorithm can identify structural parameters and unknown excitation in a sequential manner, which simplifies the identification problem and both reduce the computational effort and storages compared with other existing work.

For the identification of a large number of unknown parameters in large size structural systems, its computational efforts increase tremendously. Consequently, substructural identification approaches are used, in which a large size structure is decomposed into smaller size substructures with fewer unknown parameters (Koh and Hong, etc, 2003; Tee and Koh, 2005; Lei and Wu, 2009). The proposed structural damage detection algorithm is extended to detect local damage of large size structures based on substructure approach. Inter-connection effect between adjacent substructures is considered as the 'unknown inputs' to substructures at substructure interfaces (Lei and Wu, 2009). Element level structural parameters and the unknown inputs to the substructure are identified by the above two step Kalman estimator and the least squares estimation approach. In this paper, the proposed algorithm enables distributed identification of local damage in large structures with limited input and output measurements.

Based on the advantages of the designed wireless sensor network and the proposed distributed structural damage decoction algorithm, autonomous detection of structural local damage in large-size structures can be conducted by the implementation of the damage detection algorithm into the clusters of the wireless sensor network, which grants the wireless sensor network with "smart" characteristics. In this paper, the established smart sensor network is experimentally verified by application to detect local damage in a multi-story frame in lab to demonstrate its performance in autonomous detection of structural damage.

2 THE WIRELESS SENSOR NETWORK

Recently, a hierarchical wireless sensor network has been designed by the authors. Power consumption analysis and primary experiment tests on the accuracy of data acquisition, time synchronization of measurement data and other capabilities of the wireless sensor units validate that the designed wireless sensor network possesses favorable performances of data collection, transmission and distributed computation (Lei and Lai,2011; Lei, Lai and Liu,2011）.

2.1. Sensor Network Topology

Many sensor networks require deploying a large number of sensors. Hierarchical clustering is generally considered as an efficient and scalable way to facilitate the management and operation of such large-scale networks and minimize the total energy consumption for prolonged lifetime. In this paper, a two-level cluster-tree network topology is proposed for the wireless sensor network as shown in Fig.1. A large-size structure can be divided into substructures. The distributed sensor units deployed in a substructure are grouped into a cluster. A cluster head is assigned to each cluster to coordinate the sensors in its cluster and to collect data from them during monitoring. Communication between the distributed sensor units with their corresponding cluster head forms the lower tier and the network of cluster heads forms the upper tier. To provide fault-tolerance to the network in a case when a cluster head goes out of service, which could happen, for example, during an extreme event such as an earthquake, a backup cluster head is designed for each cluster head, so the whole sensor network can still work with the backup cluster head through the backup routs as shown in Fig.1(Jiang and Zhou,2009).

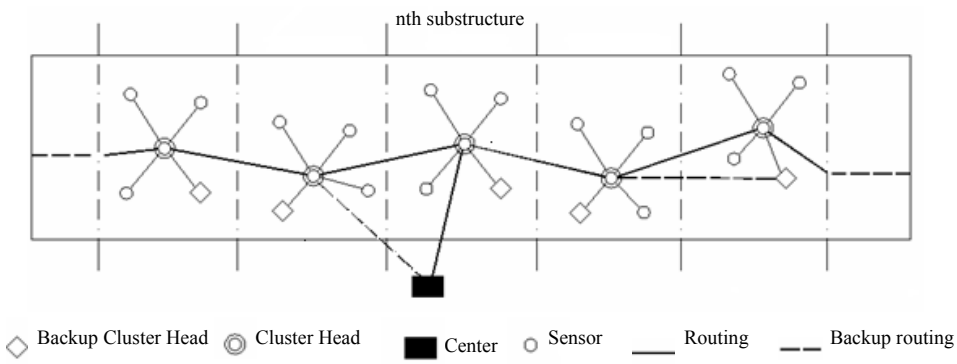

Fig. 1 A two-level cluster-tree wireless network topology

A cluster head not only serves as a router of the network messages but also possesses computational capabilities with the data collected from the sensor nodes in the cluster. This network topology provides parallel computation between the substructures, which is a useful feature for the implementation of computational methodologies for structural health monitoring and damage detection of large-size structures. Finally, a center node combines the function of a cluster head with additional computational capabilities that can be used for the final decision of structural damage detection.

2.2. Hardware Design

Fig.2(a) shows the overall hardware design of the wireless sensor unit. The sensor unit mainly consists of six functional modules: 1) sensor interface; 2) signal conditioning; 3) sensor signal digitization; 4) computational core; 5) wireless communication; 6) battery management. To package the selected hardware components into a compact wireless sensor prototype, a two-layer printed circuit board was designed and fabricated. As shown in Fig 2(b), all electrical components are surface mounted to the printed circuit board.

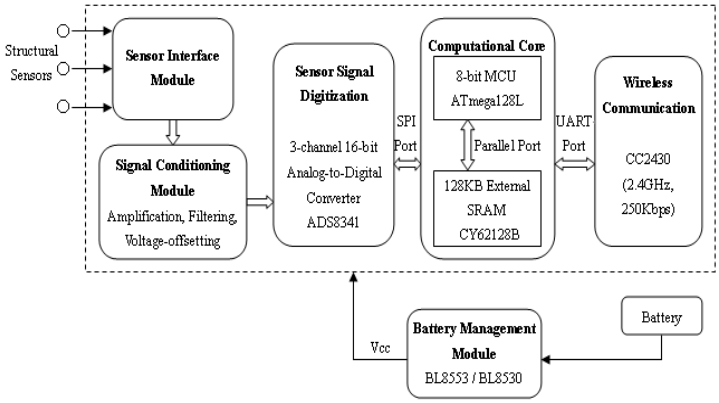

(a) Hardware structure the wireless sensor unit.

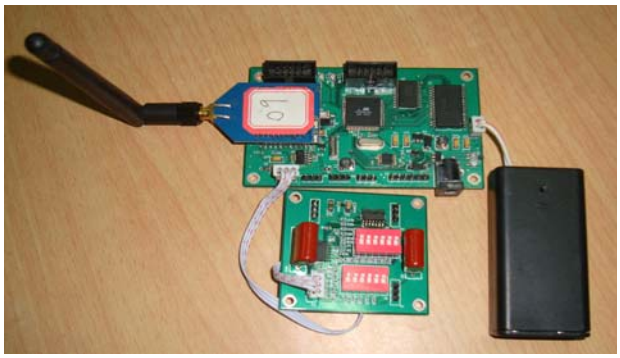

(b) Prototype of the sensor unit

Fig. 2 Wireless sensor unit in the sensor network

In this design, The Chipcon CC2430 is selected as the wireless transceiver, which is a true System-on-Chip (SoC) solution specifically tailored for IEEE 802.15.4 and ZigBee applications. In the computation core, a low-cost, low-power 8-bit Atmel AVR microcontroller (ATmega 128) is selected for the sensor unit. The microcontroller, together with certain internal and external memories, provides the capability of onboard data interrogation at the sensor level [Lynch and Loh ,2006; Lynch 2007; Atmel Corporation,2004].

The hardware structure of a cluster head in the designed wireless sensor network is similar to that of a sensor unit except that its computational core is replaced by a TMS320C5409 digital signal processor (DSP) as shown in Fig. 3(a). TMS320VC5509 has a strong data processing capacity of 400 Million Instructions Per Second (MIPS) and a 512Kbyte RAM with a power consumption of 100mW . Thus, it provides the capability of interrogating the large amount of data collected from the sensing nodes in the cluster with low power consumption. This design wireless sensor network provides parallel computation resources at group level, which is a unique feature compared with other sensor networks. Fig. 3(b) shows the prototypes of a cluster.

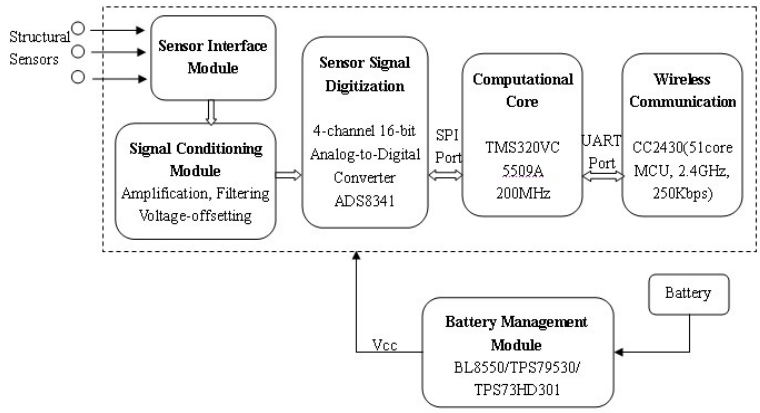

Fig. 3 Hardware structure of a wireless cluster head

3 ALGORITHM OF DISTRIBUTED STRUCTURAL DAMAGE DETECTION

In practical structural damage detection, it is often impossible to deploy many sensors to accurately measure all excitation inputs and all output responses of structures. Therefore, it is essential to develop an efficient technique which can detect structural local damage utilizing only a limited number of measured responses of structures subject to some unmeasured excitation inputs. For a large-size structure, which involves a large number of Degrees-of-freedom (DOFs), it is reasonable to apply substructure approach to reduce the computational burdens and the difficulty in obtaining reasonably accurate results of structural damage detection (Yang and Lin,2006; Koh and Hong, 2003; Tee and Koh,2005). The equation of motion of a substructure can be extracted from the equation of motion of a large size structure to yield as:

$$\boldsymbol{M}_{rr}\ddot{\boldsymbol{x}}_r(t)+[\boldsymbol{C}_{rr}\ \boldsymbol{C}_{rs}]\begin{bmatrix}\dot{\boldsymbol{x}}_r(t)\\ \dot{\boldsymbol{x}}_s(t)\end{bmatrix}+[\boldsymbol{K}_{rr}\ \boldsymbol{K}_{rs}]\begin{bmatrix}\boldsymbol{x}_r(t)\\ \boldsymbol{x}_s(t)\end{bmatrix}=\boldsymbol{B}_r\boldsymbol{f}_r(t)+\boldsymbol{B}_r^u\boldsymbol{f}_r^u(t) \tag{1}$$

where subscript 'r' denotes internal DOFs of the substructure concerned, subscript 's' denotes interface DOFs, $\boldsymbol{x}$, $\dot{\boldsymbol{x}}$ and $\ddot{\boldsymbol{x}}$ are vectors of displacements, velocity and acceleration response of the corresponding structure, respectively; M, C and K are mass, damping, and stiffness matrices of the corresponding structures, respectively; $\boldsymbol{f}_r(t)$ is a measured external excitation vector, $\boldsymbol{f}_r^u(t)$ is an unmeasured external excitation vector, and $\boldsymbol{B}_r$ and $\boldsymbol{B}_r^u$ are the influence matrices associated with $\boldsymbol{f}_r(t)$ and $\boldsymbol{f}_r^u(t)$, respectively. Usually, mass of a structure can be estimated with accuracy based on its geometry and material information. For simplicity, it can be assumed that mass matrix is a diagonal matrix.

By treating the interconnection effects as 'unknown inputs' to the substructure, the above equation can be re-arranged as :

$$\boldsymbol{M}_{rr}\ddot{\boldsymbol{x}}_r(t)+\boldsymbol{C}_{rr}\dot{\boldsymbol{x}}_r(t)+\boldsymbol{K}_{rr}\boldsymbol{x}_r(t)=\boldsymbol{B}_r\boldsymbol{f}_r(t)+\boldsymbol{B}_r^u\boldsymbol{f}_r^u(t)+\boldsymbol{B}_r^*\boldsymbol{f}_r^*(t) \tag{2}$$

where $\boldsymbol{f}_r^*(t)$ is the 'unknown input' vector at the substructure interface, $\mathbf{B}_r^*$ is the influence matrix associated with the 'unknown inputs' $\mathbf{f}_r^*(t)$, and

$$\boldsymbol{B}_r^*\boldsymbol{f}_r^*(t)=-\boldsymbol{C}_{rs}\dot{\boldsymbol{x}}_{rs}(t)-\boldsymbol{K}_{rs}\boldsymbol{x}_s(t) \tag{3}$$

Introducing a state vector $\boldsymbol{X} = \left[\boldsymbol{x} \;\; \dot{\boldsymbol{x}}\right]^T$, one can transform Eq.(2) into a state equation, i.e.,

$$\dot{\boldsymbol{X}}_r = \begin{bmatrix} \dot{\boldsymbol{x}} \\ \boldsymbol{M}^{-1}\left\{\boldsymbol{B}_r \boldsymbol{f}_r(t) + \boldsymbol{B}_r^u \boldsymbol{f}_r^u(t) + \boldsymbol{B}_r^* \boldsymbol{f}_r^*(t) - \boldsymbol{C}_{rr}\dot{\boldsymbol{x}}_r(t) - \boldsymbol{K}_{rr}\boldsymbol{x}_r(t)\right\} \end{bmatrix} = \boldsymbol{g}(\boldsymbol{X}_r, \boldsymbol{\theta}_r, \boldsymbol{f}_r, \boldsymbol{f}_r^u, \boldsymbol{f}_r^*) \tag{4}$$

in which $\boldsymbol{\theta}_r$ denotes the parametric vector of the substructure

Some sensors are deployed on the substructure to measure the response signals. Usually acceleration signals are measured and the observation vector of the focused substructure can be expressed in the discretized form as:

$$\boldsymbol{y}_r[k] = \boldsymbol{D}_r \ddot{\boldsymbol{x}}_r[k] + \boldsymbol{v}_r[k] = \boldsymbol{h}\left(\boldsymbol{X}_r[k], \boldsymbol{\theta}_r[k], \boldsymbol{f}_r[k], \boldsymbol{f}_r^u[k], \boldsymbol{f}_r^*[k]\right) + \boldsymbol{v}_r[k] \tag{5}$$

in which $\boldsymbol{v}[k]$ is the measured noise vector.

Extended Kalman Filter (EKF) has been shown to be useful for structural identification with limited response outputs (Hoshiya and Saito1984; Saito and Takei,1998; Yang and Lin,2006), but in the EKF approach, the augmented state vector includes the unknown structural parameters. Structural state vector and the parametric vector are estimated simultaneously. Such estimation requires large computation effort and storages, which can hardly be implemented even by the DSPs of a cluster head in the designed wireless sensor network. In this paper, a two-step Kalman estimator approach is proposed. In the first step, structural response state vector is considered as an implicit function of the unknown structural parameters. Then the discretized observation can be re-written as:

$$\boldsymbol{y}_r[k] = \boldsymbol{h}\left\{\boldsymbol{X}_r(\boldsymbol{\theta}_r[k]), \boldsymbol{\theta}_r[k], \boldsymbol{f}_r[k], \boldsymbol{f}_r^u[k], \boldsymbol{f}_r^*[k]\right\} + \boldsymbol{v}_r[k] \tag{6}$$

Let $\hat{\boldsymbol{\theta}}_r[k|k-1]$ be the estimated value of $\boldsymbol{\theta}_r[k]$ and $\hat{\boldsymbol{X}}_r[k|k-1]$ be the estimated value of $\boldsymbol{X}_r[k]$ at time t=($k-1$)Dt. Since $\boldsymbol{h}\left\{\boldsymbol{X}_r(\boldsymbol{\theta}_r[k]), \boldsymbol{\theta}_r[k], \boldsymbol{f}_r[k], \boldsymbol{f}_r^u[k], \boldsymbol{f}_r^*[k]\right\}$, which is a nonlinear function of unknown parametric vector $\boldsymbol{\theta}_r$, it can be linearized around $\hat{\boldsymbol{\theta}}_r[k|k-1]$ through Taylor expansion, i.e.

$$\begin{aligned}\boldsymbol{h}\left\{\boldsymbol{X}_r(\boldsymbol{\theta}_r[k]), \boldsymbol{\theta}_r[k], \boldsymbol{f}_r[k], \boldsymbol{f}_r^u[k], \boldsymbol{f}_r^*[k]\right\} &= \boldsymbol{h}\left\{\hat{\boldsymbol{X}}_r[k|k-1], \hat{\boldsymbol{\theta}}_r[k|k-1], \boldsymbol{f}_r[k], \boldsymbol{f}_r^u[k], \boldsymbol{f}_r^*[k]\right\} \\ &\quad + \boldsymbol{H}_r[k]\left(\boldsymbol{\theta}_r[k] - \hat{\boldsymbol{\theta}}_r[k-1]\right)\end{aligned} \tag{7}$$

where $\boldsymbol{H}_r[k]$ is derived based on the chain rule of partial differentiation as:

$$\boldsymbol{H}_r[k] = \boldsymbol{H}_{r,\theta}[k] + \boldsymbol{H}_{r,X}[k]\boldsymbol{X}_{r,\theta}[k] \tag{8}$$

$$\boldsymbol{H}_{r,\theta}[k] = \left.\frac{\partial \boldsymbol{h}_r}{\partial \boldsymbol{\theta}_r}\right|_{\boldsymbol{X}_r = \hat{\boldsymbol{X}}_r[k|k-1], \boldsymbol{\theta}_r = \hat{\boldsymbol{\theta}}_r[k|k-1]}; \; \boldsymbol{H}_{r,X}[k] = \left.\frac{\partial \boldsymbol{h}_r}{\partial \boldsymbol{X}_r}\right|_{\boldsymbol{X}_r = \hat{\boldsymbol{X}}_r[k|k-1], \boldsymbol{\theta}_r = \hat{\boldsymbol{\theta}}_r[k|k-1]}; \boldsymbol{X}_{r,\theta}[k] = \left.\frac{\partial \boldsymbol{X}_r}{\partial \boldsymbol{\theta}_r}\right|_{\boldsymbol{\theta}_r = \hat{\boldsymbol{\theta}}_r[k|k-1]} \tag{9}$$

Then, the recursive solution for the parametric vector can be estimated based on Kalman estimator as:

$$\hat{\boldsymbol{\theta}}_r[k+1|k] = \hat{\boldsymbol{\theta}}_r[k|k-1] + \boldsymbol{K}_{r\theta}[k]\left[\boldsymbol{y}_r[k] - \boldsymbol{h}\left(\hat{\boldsymbol{X}}_r[k|k-1], \hat{\boldsymbol{\theta}}_r[k|k-1], \boldsymbol{f}_r[k], \boldsymbol{f}_r^u[k], \boldsymbol{f}_r^*[k]\right)\right] \tag{10}$$

in which $\boldsymbol{K}_{r\theta}[k]$ is the Kalman gain matrix for $\boldsymbol{\theta}_r$ given by:

$$\boldsymbol{K}_{r\boldsymbol{\theta}}[k]=\boldsymbol{P}_{r\boldsymbol{\theta}}[k]\,\boldsymbol{H}_r^{\mathrm{T}}[k]\left(\boldsymbol{H}_r[k]\,\boldsymbol{P}_{r\boldsymbol{\theta}}[k]\,\boldsymbol{H}_r^{\mathrm{T}}[k]+\boldsymbol{R}_{\boldsymbol{\theta}}[k]\right)^{-1} \tag{11}$$

and $\boldsymbol{P}_{r\boldsymbol{\theta}}[k]$ is given by

$$\boldsymbol{P}_{r\theta}[k]=\left(\boldsymbol{I}-\boldsymbol{K}_{r\boldsymbol{\theta}}[k]\,\boldsymbol{H}_r[k]\right)\boldsymbol{P}_{r\boldsymbol{\theta}}[k-1] \tag{12}$$

In the second step, the recursive solution for the structural state vector is derived based on the Kalman estimator as:

$$\hat{\boldsymbol{X}}_r[k+1|k]=\tilde{\boldsymbol{X}}_r[k+1|k]+\boldsymbol{K}_{rX}[k]\left[\boldsymbol{y}_r[k]-\boldsymbol{h}\left(\hat{\boldsymbol{X}}_r[k|k-1],\hat{\boldsymbol{\theta}}_r[k|k-1],\boldsymbol{f}_r[k],\boldsymbol{f}_r^u[k],\boldsymbol{f}_r^*[k]\right)\right] \tag{13}$$

where

$$\tilde{\boldsymbol{X}}_r[k+1|k]=\hat{\boldsymbol{X}}_r[k|k-1]+\int_{k\Delta t}^{(k+1)\Delta t}\boldsymbol{g}(\hat{\boldsymbol{X}}_r,\boldsymbol{\theta}_r,\boldsymbol{f}_r,\boldsymbol{f}_r^u,\boldsymbol{f}_r^*)dt \tag{14}$$

$\boldsymbol{K}_{rX}[k]$ is the Kalman gain matrix for state vector $\boldsymbol{X}_r$ [18].

Differentiation both sides of Eq.(4) with respect to $\boldsymbol{\theta}_r$, one can derive the equation for $\boldsymbol{X}_{r,\boldsymbol{\theta}}$ as:

$$\dot{\boldsymbol{X}}_{r,\theta}=\frac{\partial\boldsymbol{g}(\boldsymbol{X}_r(\boldsymbol{\theta}_r),\boldsymbol{\theta}_r,\boldsymbol{f}_r,\boldsymbol{f}_r^u,\boldsymbol{f}_r^*)}{\partial\boldsymbol{\theta}_r}=\bar{\boldsymbol{g}}\left(\boldsymbol{X}_{r,\theta},\boldsymbol{X}_r(\boldsymbol{\theta}_r),\boldsymbol{\theta}_r\right) \tag{15}$$

Then,

$$\boldsymbol{X}_{r,\boldsymbol{\theta}}[k+1|k]=\boldsymbol{X}_{r,\boldsymbol{\theta}}[k|k-1]+\int_{k\Delta t}^{(k+1)\Delta t}\bar{\boldsymbol{g}}\left(\boldsymbol{X}_{r,\boldsymbol{\theta}},\boldsymbol{X}_r(\boldsymbol{\theta}_r),\hat{\boldsymbol{\theta}}_r\right)dt \tag{16}$$

However, since $\boldsymbol{f}_r^u$ and $\boldsymbol{f}_r^*$ are "unknown inputs" to the substructure concerned, it's impossible to obtain recursive solution by the classical extended Kalman estimator alone.

For the general case that measurements (sensors) are not available at the DOFs at the substructure interface, the 'unknown input' $\boldsymbol{f}_r^*$ at time $t=(k+1)\times\Delta t$ can be estimated based on its expression in Eq.(2), i.e.,

$$\boldsymbol{B}\hat{\boldsymbol{f}}_r^*[k+1|k]=-\hat{\boldsymbol{C}}_{rs}[k+1|k]\,\hat{\dot{\boldsymbol{x}}}_s[k+1|k]-\hat{\boldsymbol{K}}_{rs}[k+1|k]\,\hat{\boldsymbol{x}}_s[k+1|k] \tag{17}$$

in which $\hat{\boldsymbol{f}}_r^*[k+1|k]$ is the estimation of $\boldsymbol{f}_r^*[k+1]$ given the estimated values of extended state vector in different substructure. With the estimated value of the 'unknown input' $\hat{\boldsymbol{f}}_r^*[k+1|k]$, the unknown external excitations $\hat{\boldsymbol{f}}_r^*[k+1|k]$ can be estimated by the least square estimation.

So, the proposed algorithm can identify structural parameters and unknown excitation in a sequential manner, which simplifies the identification problem and reduce both computational effort and storages compared with other existing work.

4 STRUCTURAL DAMAGE DETCTION BY THE SMART SENSOR NETWORK

The designed hierarchical sensor network has a two-level cluster-tree architecture. The distributed sensors are grouped into clusters, in which a cluster head assigned to each cluster not only serves as a router of the network messages but also possesses computational capabilities with the data collected from the sensing nodes in the cluster, especially the cluster head consists of a low power DSP with strong computing capacity. Therefore, the sensor network provides parallel computation resources at group level, which is a particularly useful feature for the implementation of computational methodologies for structural health monitoring and damage detection of large-size structures. The proposed structural damage detection algorithm can detect local damage of large size structures based on substructure approach. Element level structural parameters and the 'unknown inputs' in the substructure are identified by a two step Kalman estimator and the least squares estimation approach. The algorithm enables distributed identification of local damage in each substructure of large structures with less computational effort and storage compared with other existing algorithms. Based on the unique advantages of the damage decoction algorithm and the wireless sensor network, autonomous detection of structural local damage can be conducted by implementation of the damage detection algorithm on the wireless sensor network. The proposed algorithm for distributed detection of structural damage is coded in C language and embedded into the cluster heads in the wireless sensor network, which grants the wireless sensor network with "smart" characteristics.

4.1 Experimental Validation

To assess the performance of the smart wireless sensing network for structural damage detection, detecting structural damage of an eight-story shear type building in lab is selected as an experimental example, as shown by Fig.4.

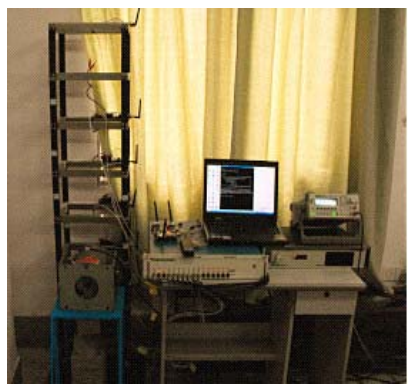

Fig. 4 Experimental study with an eight-story building in lab

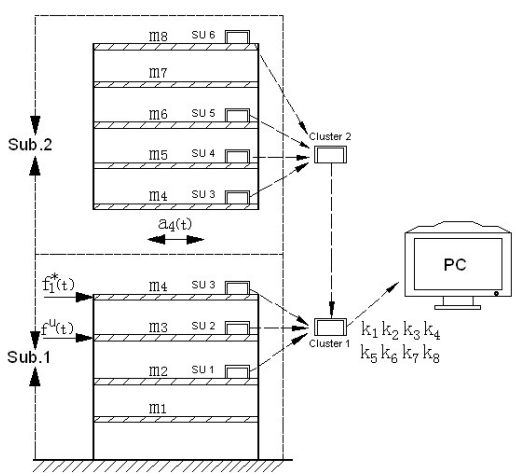

Fig.5 Structural Damage detection with smart sensor network

The structural model behaves as a lumped m ass shear structure. The building is excited by a magnetic shake, which induces unmeasured white noise inputs to the building at the 3rd story level. Six light PCB accelerometers are installed at the 1st, 3rd, 4th, 5th 7th and 8th floors to measured the acceleration responses of at the corresponding floor levels. Structural damage is simulated by replacing the flexible columns with ones with fewer thicknesses, which results in the reduction of corresponding story stiffness k_i ($i=1, 2, ...8$). In the experiment, structural damage is assumed to occur in the 5th story which leads to the reduction of k_5.

In the substructure approach, the building is divided into two substructures with floors 1-4 being the 1st substructure and floors 5th-8th being the second one as shown as shown in Fig. 5. Topology of the wireless sensor network is also shown by Fig. 5. In each substructure, the three sensor units are grouped into a cluster. One of the sensor unit (SU) in each substructure is assigned as the cluster head (CH) to each cluster to collect data from them during vibration. Each CH is implemented with the algorithm for structural damage detection. Therefore, each CH not only serves as a router of the network messages but also can detect structural damage in different substructures concurrently with parallel computing. Then, the identified structural dynamic parameters of each substructure are sent by each cluster head (CH) to the central server where a final decision of structural damage detection is made by comparing the identified story stiffness with those of undamaged structures.

Fig.6(a) shows the results of the identified story stiffness parameters sent to the PC server for the undamaged building while the identified values story stiffness parameters for the damaged building are shown on the central server in Fig. 6(b). By comparing these two identification results shown on the PC server in Figs.6 (a)-6(b), it is clearly shown that the proposed technique can autonomously detect and localize the structural damage based on the degrading of identified values of element stiffness parameters of k_5.

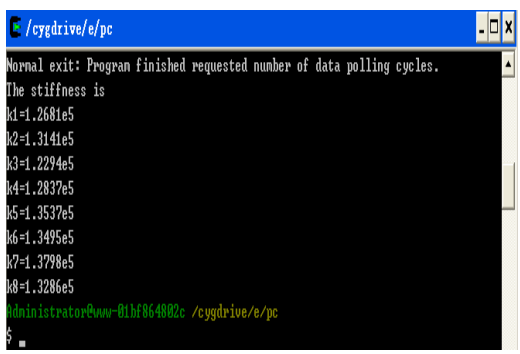

(a): Identification results of story stiffness of the undamaged building

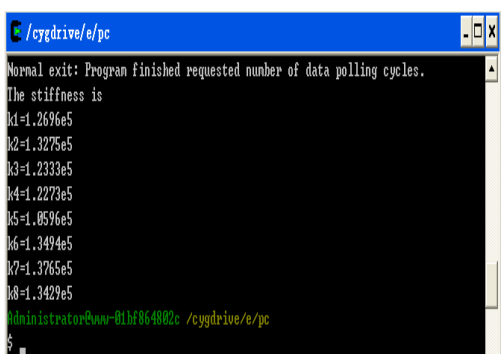

(b): Identification results of story stiffness of the damaged building

Figure 6: Identification results of story stiffness of the building

5. CONCLUSIONS

In this paper, a smart wireless sensor network is established for autonomous structural damage detection. The designed hierarchical wireless sensor network has a two-level cluster-tree architecture. The distributed sensors are grouped into a cluster, in which a cluster head consists of a low power DSP with strong computing capacity. Thus, the sensor network provides parallel computation resources at group level, which is a particularly useful feature for the implementation of computational methodologies for structural health monitoring and damage detection of large-size structures.

An algorithm for distributed structural damage detection with limited input and output measurements is proposed. The algorithm is based on a two step Kalman estimator and can identify structural parameters and unknown excitation in a sequential manner, which simplifies the identification problem and reduces both computational effort and storages compared with other existing algorithms.

A smart wireless sensor network for autonomous detection of structural local damage is implemented by embedding the proposed structural damage detection algorithm into the cluster heads in the wireless sensor network. Lab experiment of detecting local damage in a multi-story shear building shows that smart sensor network is effective for autonomous detection of structural damage with limited input and outputs measurements.

More researches on the applications of the established smart sensor network for autonomous structural damage of other large-size structures in complex configurations are needed to further validate the performances of the smart sensor network.

ACKNOWLEDGMENTS

This research has been partially supported by the National Natural Science Foundation of China (NSFC) through Grant No. 51178406 and by China National High Technology Research and Development Program 2007AA04Z420.

REFERENCES

Ababneh. N.(2010). Performance Evaluation of a Topology Control Algorithm for Wireless Sensor Networks. *International Journal of Distributed Sensor Networks*, Article ID: 671385.

Atmel Corporation.(2004). Atmel 8-bit AVR Microcontroller with 128k Bytes In-System Programmable Flash. Atmel Corporation, San Jose, CA.

Chang. F.K. (ed.)(2007),(2009). *Proceedings of the 6th and 7th International Workshops on Structural Health Monitoring*, Stanford University". Stanford, CA, CRC Press, New York.

Chipcon Inc. Http://www.chipon.com.

Gao.Y., Spencer Jr. B.F. and Ruzi-Sandoval. M.E.(2006). Distributed computing strategy for structural health monitoring. *Structural Control Health Monitoring*..13, 488–507.

Glaser. S.D., Li. H., Wang. L.M., Ou .J.P. and Lynch.J.P. (2007). Sensor technology innovation for the advancement of structural health monitoring: a strategic program of US-China research for the next decade. *Smart Structures and Systems*, 3:2, 221-244.

Gu.Y., Wu.Q.S. and Rao.N.S.(2010). Optimizing Cluster Heads for Energy Efficiency in Large-Scale Heterogeneous Wireless Sensor Networks. *International Journal of Distributed Sensor Networks*, Article ID: 961591.

Hoshiya. M. and Saito. E.(1984). Structural identification by extended Kalman filter. *Journal of Engineering Mechanics* (ASCE) .110:12, 1757–1771.

IEEE Computer Society. IEEE Standard 802.15.4, The Institute of Electrical and Electronics Engineers, Inc. 3 Park Avenue, New York, NY 10016-5997, USA, 2003.

Jiang. N., Zhou. R.G. and Ding. Q.L.(2009). Dynamics of Wireless Sensor Networks. *International Journal of Distributed Sensor Networks*.. 5:6, 693-707.

Koh.C.G., Hong.B. and Liaw.C.Y.(2003). Substructural and progressive structural identification method". *Engineering Structures*, 25 ,1551-1563.

Lei .Y., Shen. W.A., Song,Y. and Wang,Y.(2010). Intelligent Wireless Sensors with Application to the Identification of Structural Modal Parameters and Steel Cable Forces: From the Lab to the Field. *Advances in Civil Engineering*, Article ID 316023.

Lei. Y., Wu. D. T. and Liu. L. J.(2009). Detection of Local Damage in Large Size Structures Based on Substructure and Distributed Computing Strategy. *Proceedings of the 4th International Conference on Structural Health Monitoring on Intelligent Infrastructure (SHMII-4)*, 22-24 July , Zurich, Switzerland.

Lei. Y. and Lai. Z. L.(2011). The Modal Identification of Structure Using Distributed ERA and EFDD Methods. *Advanced Materials Research* . 163-167, 2532-2536.

Lei. Y., Lai. Z. L., Liu L.J., Tan. Y. L. and Wang. J. X.(2011). A New Type Wireless Sensor Network for Distributed Structural Damage Detection.. *Proceedings of the 1st Middle East Conference on Smart Monitoring, Assessment and Rehabilitation of Civil Structures*, Feb. 8-10, Dubai UAE.

Lynch. J.P. and Loh. K.J.(2006). A summary review of wireless sensors and sensor networks for structural health monitoring. *Shock and Vibration Diges*t, 38:2, 91–128.

Lynch.J.P.(2007).An overview of wireless structural health monitoring for civil structures. *Philosophical Transactions of the Royal Society of London. Series A, Mathematical and Physical Sciences,* 365:1851, 345-372.

Lynch.J.P., Sundararajan.A., Law.K.H., Kiremidjian. A.S., Kenny. T.W. and Carrey. E.(2003) . Embedment of Structural Monitoring Algorithms in a Wireless Sensing Unit. *Structural Engineering Mechanics*, 15 .285–297.

Meier. U., Havaranek. B. and Motavalli. M. (eds.)(2009). *Proceedings of the 4th International Conference on structural health monitoring of intelligent infrastructures*, Zurich.

Patra. C., Roy.A.G., Chattopadhyay. S. and Bhaumik. P. (2010). Designing Energy-Efficient Topologies for Wireless Sensor Network: Neural Approach. *International Journal of Distributed Sensor Networks,* Article ID: 216716 .

Saito. T. and Takei. K.(1998). Development of a Kalman filter with fading memory. *Structural Safety and Reliability*, 387-394.

Spencer Jr. B. F., Ruiz-Sandova. M. E. and Kurata. N., (2004). Smart sensing technology: opportunities and challenges. *J. of Structural Control and Health Monitoring*, 11:4, 349– 368.

Tee. K.F., Koh. C.G. and Quek. S.T.(2005). Substructural first- and second-order model identification for structural damage assessment, *Earthquake Engn. Struct. Dyn*, 34,1755-1775.

Yang.J.N., Lin. S., Huang.H.W. and Zhou. L.(2006). An adaptive extended Kalman filter for structural damage identification. *Journal of Structural Control and Health Monitoring* 13, 849–867.

Zimmerman. A.T., Shiraishi. M., Swartz. R.A. and Lynch. J.P.(2008). Automated modal parameter estimation by parallel processing within wireless monitoring systems. *J. of Infrastructures Systems, ASCE,* 14:1, 102-113.